33.445 Historic Resource Overlay Zone

445

Sections:

General
- 33.445.010 Purpose
- 33.445.020 Where These Regulations Apply
- 33.445.030 Types of Historic Resources and Map Symbols
- 33.445.040 Adoption of Design Guidelines
- 33.445.050 Modifications that Enhance Historic Resources
- 33.445.060 Notice of Building and Housing Code Violations

Historic Landmarks
- 33.445.100 Designation of a Historic Landmark
- 33.445.110 Removal of a Historic Landmark Designation
- 33.445.120 Historic Preservation Incentives for Historic Landmarks
- 33.445.130 Relocation of a Historic Landmark
- 33.445.140 Alterations to a Historic Landmark
- 33.445.150 Demolition of a Historic Landmark

Conservation Landmarks
- 33.445.200 Designation of a Conservation Landmark
- 33.445.210 Removal of a Conservation Landmark Designation
- 33.445.220 Historic Preservation Incentives for Conservation Landmarks
- 33.445.230 Alterations to a Conservation Landmark
- 33.445.240 Demolition of a Conservation Landmark

Historic Districts
- 33.445.300 Designation of a Historic District
- 33.445.310 Removal of a Historic District Designation
- 33.445.315 Preservation Agreements in Historic Districts
- 33.445.320 Development and Alterations in a Historic District
- 33.445.330 Demolition of Historic Resources in a Historic District

Conservation Districts
- 33.445.400 Designation of a Conservation District
- 33.445.410 Removal of a Conservation District Designation
- 33.445.415 Preservation Agreements in Conservation Districts
- 33.445.420 Development and Alterations in a Conservation District
- 33.445.430 Demolition of Historic Resources in a Conservation District

Historic Resource Inventory Listing
- 33.445.500 Listing in the Historic Resource Inventory
- 33.445.510 Removal of Historic Resource Inventory Listing
- 33.445.515 Preservation Agreements for Resources Listed in the Historic Resource Inventory
- 33.445.520 Demolition of Properties Listed in the Historic Resource Inventory

Historic Preservation Agreements and Historic Preservation Incentives
- 33.445.600 Preservation Agreements
- 33.445.610 Historic Preservation Incentives

Community Design Standards
33.445.700 Purpose
33.445.710 When Community Design Standards May Be Used
33.445.720 When Community Design Standards May Not Be Used
Demolition Reviews
33.445.800 Types of Reviews
33.445.805 Supplemental Application Requirements
33.445.810 Demolition Delay Review

General

33.445.010 Purpose

This chapter protects certain historic resources in the region and preserves significant parts of the region's heritage. The regulations implement Portland's Comprehensive Plan policies that address historic preservation. These policies recognize the role historic resources have in promoting the education and enjoyment of those living in and visiting the region. The regulations foster pride among the region's citizens in their city and its heritage. Historic preservation beautifies the city, promotes the city's economic health, and helps to preserve and enhance the value of historic properties.

33.445.020 Where These Regulations Apply

- Sections 33.445.010 through .810 apply to all historic resources.
- Sections 33.445.100 through .150 apply to Historic Landmarks, including those within Historic Districts and Conservation Districts.
- Sections 33.445.200 through .240 apply to Conservation Landmarks, including those within Historic Districts and Conservation Districts.
- Sections 33.445.300 through .330 apply to Historic Districts and to the portions of Conservation Districts that are within a Historic District.
- Sections 33.445.400 through .430 apply to Conservation Districts that are not within a Historic District.
- Sections 33.445.500 through .520 apply to historic resources listed in the City's Historic Resource Inventory.

33.445.030 Types of Historic Resource Designations and Map Symbols

A. Historic Landmark. This type of resource may be an individual structure, site, tree, landscape, or other object that is of historic or cultural significance. A Historic Landmark generally derives its significance from at least two of the following:

- The importance of its designer, previous owners, or builder in local, state, or national history;
- The quality of its architecture or landscaping;
- The fact that it is one of a few remaining examples of a building type that is of significance in local, state, or national history;
- Association with a significant cultural or ethnic group; or
- The role it has played in shaping local, state, or national history.

Information supporting a specific resource's designation is found in the City's Historic Resource Inventory, its National Register nomination, or the local evaluation done in support of the resource's designation.

B. Conservation Landmark. This type of resource may be an individual structure, site, tree, landscape, or other object that is of historical or cultural interest at the local or neighborhood level. Conservation Landmarks are examples of developments that have helped create the character of the region's districts and neighborhoods. A Conservation Landmark generally derives its significance from at least two of the following:

- The importance of its designer, previous owners, or builder in local, state, or national history;
- The quality of its architecture or landscaping;
- The fact that it is one of a few remaining examples of a building type that is of significance in the neighborhood's history;
- Association with a significant cultural or ethnic group; or
- The role it has played in creating the historic character of the area where it is located.

Information supporting a specific resource's designation is found in the City's Historic Resource Inventory or the local evaluation done in support of the resource's designation.

C. Historic District. This type of resource is a collection of individual resources that is of historical or cultural significance at the local, state, or national level. Information supporting a specific district's designation is found in the City's Historic Resource Inventory, its National Register nomination, or the local evaluation done in support of the district's designation.

D. Conservation District. This type of resource is a collection of individual resources that is of historical or cultural significance at the local or neighborhood level. Information supporting a specific district's designation is found in the City's Historic Resource Inventory or the local evaluation done in support of the district's designation.

E. Historic Resource Inventory Listing. This type of resource is listed in the City's Historic Resource Inventory. The Inventory is a catalogue of historic resources that may be eligible for landmark or district designation. Most resources listed in the Inventory are given a ranking of I, II, or III; some are unranked. Rank I and II resources may be eligible for listing in the National Register; Rank I resources are given the highest priority for listing. Rank III resources may be eligible for listing in the National Register as part of a Historic District.

F. Map symbols. Boundaries of Historic Districts and Conservation Districts are shown on the Official Zoning Maps. Historic Landmarks and Conservation Landmarks are also shown on the Official Zoning Maps.

33.445.040 Adoption of Design Guidelines

Design guidelines for Historic Districts and Conservation Districts are reviewed and approved by the Historic Landmarks Commission and adopted by City Council. These guidelines are used for historic resource review, which is required for some alterations to historic resources. Historic resource review ensures the conservation and enhancement of the special characteristics of historic resources.

33.445.050 Modifications that Enhance Historic Resources

The review body may grant modifications to site-related development standards, including the sign standards of Chapters 32.32 and 32.34 of the Sign Code, as part of the historic resource review process. However, modification to a parking and loading regulation within the Central City plan district may not be considered through the historic resource review process. Modifications made as part of historic resource review are not required to go through a separate adjustment process. To obtain approval of a modification to site-related development standards, the applicant must show that the proposal meets the approval criteria stated in Section 33.846.070, Modifications Considered During Historic Resource Review. Modifications to all other standards are subject to the adjustment process. Modifications that are denied through historic resource review may be requested through the adjustment process.

33.445.060 Notice of Building and Housing Code Violations

When the Bureau of Development Services declares a Historic Landmark or Conservation Landmark to be a dangerous building or posts a landmark to remain vacant, they will notify the Historic Landmarks Commission of such action and of the specific code violations. The notice must be sent within five working days of the action. The notice provides the Historic Landmarks Commission and the community the opportunity to inform the owner of potential rehabilitation programs and benefits or to pursue public or private acquisition and restoration of the landmark.

Historic Landmarks

33.445.100 Designation of a Historic Landmark

Local designation of Historic Landmarks may be established by the Historic Landmark Commission through a legislative or quasi-judicial procedure.

A. **Designation by Historic Landmark Commission.** Historic Landmark designation may be established by the Historic Landmark Commission through a legislative procedure, using the approval criteria of Section 33.846.030.C.

B. **Quasi-judicial designation.** Historic Landmark designation may be established through a quasi-judicial procedure; historic designation review is required.

33.445.110 Removal of a Historic Landmark Designation

A. Requests for removal. Removal of a resource's designation as a local Historic Landmark requires a historic designation removal review, except when the resource is destroyed or relocated as specified in Subsections B and C, below.

B. Removal after destruction. If the resource is destroyed by causes beyond the control of the owner, its Historic Landmark designation is automatically removed.

C. Removal after demolition. If the resource is demolished or relocated, after approval of demolition through demolition review or after demolition delay, its Historic Landmark designation is automatically removed.

33.445.120 Historic Preservation Incentives for Historic Landmarks

Historic Landmarks are eligible to use historic preservation incentives and preservation agreements. See Sections 33.445.600 through 610.

33.445.130 Relocation of a Historic Landmark

When a Historic Landmark is relocated, the following apply:

A. The receiving site is subject to Section 33.846.060, Historic Resource Review. If the applicant wishes to retain the Historic Landmark designation at the receiving site, the receiving site is also subject to Section 33.846.030, Historic Designation Review.

B. The Historic Landmark designation is automatically removed from the sending site; see Section 33.855.075, Automatic Map Amendments For Historic resources

C. When there is a preservation agreement that requires demolition review before demolition or relocation will be allowed, the sending site is also subject to Section 33.846.080, Demolition Review.

33.445.140 Alterations to a Historic Landmark

Alterations to a Historic Landmark require historic resource review to ensure the landmark's historic value is considered prior to or during the development process.

A. When historic resource review for a Historic Landmark is required. Unless exempted by Subsection B, below, the following proposals are subject to historic resource review. Some modifications to site-related development standards may be reviewed as part of the historic resource review process; see Section 33.445.050:

1. Exterior alterations;
2. Change of exterior color when:
   a. Exterior color or material is specifically listed in the Historic Resources Inventory, Historic Landmark nomination, or National Register nomination as an attribute that contributes to the resource's historic value; or
   b. Other proposed alterations to the landmark require review and the proposed alterations include a change of exterior color; or
   c. Exterior color has been specifically required through a land use review.
3. Installation or alteration of exterior signs;
4. Alteration of an interior space when that interior space is designated as a Historic Landmark;
5. Proposals using any of the provisions of the a, Alternative Design Density Overlay Zone, specified in Sections 33.405.040 through .080; and
6. Proposals in the Albina Community plan district using the provisions of Section 33.505.220, Parking Requirement Reduction, or Section 33.505.230, Attached Residential Infill on Vacant Lots in R5-Zoned Areas.

B. Exempt from historic resource review.

1. Construction of a detached accessory structure with 200 square feet or less of floor area when the accessory structure is at least 40 feet from a front property line and, if on a corner lot, at least 25 feet from a side street lot line;

2. Alterations that do not require a building, site, zoning, or sign permit from the City, and that will not alter the exterior features of a resource having such features specifically listed in the Historic Resource Inventory, Historic Landmark nomination, or National Register nomination as attributes that contribute to the resource's historic value;

3. Alterations in landscaping unless the landscaping is identified in the Historic Resource Inventory, Historic Landmark nomination, or National Register nomination as an attribute that contributes to the historic value of a Historic Landmark;

4. Parking lot landscaping that meets the standards of this Title and does not include a wall or a fence;

5. Repair;

6. Maintenance;

7. Rooftop mechanical equipment, other than radio frequency transmission facilities, added to an existing building if the following are met:

    a. The area where the equipment will be installed must have a pitch of 1/12 or less;

    b. No more than 8 mechanical units are allowed, including both proposed and existing units;

    c. The proposed mechanical equipment must be set back at least 4 feet from the edge of the roof for every 1 foot of height of the equipment above the roof surface or top of parapet; and

    d. The proposed equipment must have a matte finish or be painted to match the roof.

8. Public Art as defined in Chapter 5.74;

9. Exterior Alterations to accommodate persons with disabilities in accordance with Chapter 11 of the Oregon Structural Specialty Code, when such alterations can be installed and removed without destroying existing materials;

10. Light wells when fully surrounded by the existing walls of the building;

11. Installation or removal of storm windows and doors; and

12. Installation or removal of screen windows and doors.

33.445.150 Demolition of a Historic Landmark

Demolition of a Historic Landmark requires one of two types of review to ensure the landmark's historic value is considered. The review period also ensures that there is an opportunity for the community to fully consider alternatives to demolition.

A. Demolition review.

1. When demolition review is required. Unless exempted by Subsection C, below, demolition of a Historic Landmark is subject to demolition review if:

a. It is individually listed in the National Register of Historic Places; or

b. There is a covenant with the City that requires the owner to obtain City approval before demolishing or relocating the Historic Landmark.

2. Issuance of a demolition permit after demolition review. If the review body for demolition review approves demolition of the Historic Landmark, a permit for demolition will not be issued until the following are met:

a. The decision in the demolition review is final;

b. At least 120 days have passed since the date the Director of the Bureau of Development Services determined that the application was complete; and

c. A permit for a new building on the site has been issued. The demolition and building permits may be issued simultaneously.

B. Demolition delay review. Unless addressed by Subsection A, above, or exempted by Subsection C, below, all Historic Landmarks are subject to demolition delay review.

C. Exempt from demolition review and demolition delay review. The following are exempt from demolition review and demolition delay review:

1. Demolition of Historic Landmarks required to be demolished because:

a. The Bureau of Development Services requires the demolition due to an immediate danger to the health, safety, or welfare of the occupants, the owner, or that of the general public, as stated in Section 29.40.030 of Title 29, Property Maintenance Regulations; or

b. The Code Hearings Officer requires the demolition, as provided for in Section 29.60.080 of Title 29, Property Maintenance Regulations.

2. Demolition of detached accessory structures no larger than 200 square feet, unless the accessory structure is identified in the Historic Resource Inventory, Historic Landmark nomination, or National Register nomination as an attribute that contributes to the historic value of the Historic Landmark.

Conservation Landmarks

33.445.200 Designation of a Conservation Landmark

Conservation Landmarks may be designated by the Historic Landmark Commission through a legislative procedure or through a quasi-judicial procedure.

A. Designation by Historic Landmark Commission. Conservation Landmark designation may be established by the Historic Landmark Commission through a legislative procedure, using the approval criteria of Section 33.846.030.C.

B. Quasi-judicial designation. Conservation Landmark designation may be established through a quasi-judicial procedure; historic designation review is required.

33.445.210 Removal of a Conservation Landmark Designation

A. **Requests for removal.** Removal of a resource's designation as a Conservation Landmark requires a historic designation removal review, except when the resource is destroyed or relocated as specified in Subsections B and C, below.

B. **Removal after destruction.** If the resource is destroyed by causes beyond the control of the owner, its Conservation Landmark designation is automatically removed.

C. **Removal after demolition.** If the resource is demolished or relocated, after either approval of demolition through demolition review or after demolition delay, its Conservation Landmark designation is automatically removed.

33.445.220 Historic Preservation Incentives for Conservation Landmarks

Conservation Landmarks are eligible to use historic preservation incentives and preservation agreements. See Sections 33.445.600 through .610.

33.445.225 Relocation of a Conservation Landmark

When a Conservation Landmark is relocated, the following apply:

A. The receiving site is subject to Section 33.846.060, Historic Resource Review. If the applicant wishes to retain the Conservation Landmark designation at the receiving site, the receiving site is also subject to Section 33.846.030, Historic Designation Review.

B. The Conservation Landmark designation is automatically removed from the sending site; see Section 33.855.075, Automatic Creation or Removal of Historic Resource Designation.

C. When there is a preservation agreement that requires demolition review before demolition or relocation will be allowed, the sending site is also subject to Section 33.846.080, Demolition Review.

33.445.230 Alterations to a Conservation Landmark

Alterations to Conservation Landmarks require historic resource review to ensure the landmark's historic value is considered prior to or during the development process.

A. **When historic resource review for a Conservation Landmark is required.** Unless exempted by Subsection B, below, the following proposals are subject to historic resource review. Some may be eligible to use the Community Design Standards as an alternative; see Section 33.445.710:

1. Exterior alteration;
2. Change of exterior color when:
   a. Exterior color or material is a character defining features that is specifically listed in the Historic Resource Inventory, Conservation Landmark nomination, or National Register nomination; or
   b. Other proposed alterations to the landmark require review and the proposed alterations include a change of exterior color; or
   c. Exterior color has been specifically required through a land use review.

3. Installation or alteration of exterior signs;

4. Alteration of an interior space when that interior space is designated as a Conservation Landmark;

5. Proposals using one of the provisions of the a, Alternative Design Density Overlay Zone, specified in Sections 33.405.040 through .080; and

6. Proposals in the Albina Community plan district using the provisions of Section 33.505.220, Parking Requirement Reduction, or Section 33.505.230, Attached Residential Infill on Vacant Lots in R5-Zoned Areas.

B. Exempt from historic resource review.

1. Construction of a detached accessory structure with 200 square feet or less of floor area when the accessory structure is at least 40 feet from the front property line and, if on a corner lot, at least 25 feet from a side street lot line;

2. Alterations that do not require a building, site, zoning, or sign permit from the City, and that will not alter the exterior features of a resource having such features specifically listed in the Historic Resource Inventory, Historic Landmark nomination, or National Register nomination as attributes that contribute to the resource's historic value;

3. Alterations in landscaping unless the landscaping is identified in the Historic Resource Inventory, Landmark nomination, or National Register nomination as an attribute that contributes to the historic value of a Conservation Landmark;

4. Parking lot landscaping that meets the standards of this Title and does not include a wall or fence;

5. Repair;

6. Maintenance;

7. Rooftop mechanical equipment, other than radio frequency transmission facilities, added to the roof of an existing building if the following are met:

   a. The area where the equipment will be installed must have a pitch of 1/12 or less;

   b. No more than 8 mechanical units are allowed, including both proposed and existing units;

   c. The proposed mechanical equipment must be set back at least 4 feet from the edge of the roof for every 1 foot of height of the equipment above the roof surface or top of parapet; and

   d. The proposed equipment must have a matte finish or be painted to match the roof;

8. Public Art as defined in Chapter 5.74;

9. Exterior alterations to accommodate persons with disabilities in accordance with Chapter 11 of the Oregon Structural Specialty Code, when such alterations can be installed and removed without destroying existing materials;

10. Light wells when fully surrounded by the existing walls of the building;

11. Installation or removal of storm windows and doors; and

12. Installation or removal of screen windows and doors.

33.445.240 Demolition of a Conservation Landmark

Demolition of a Conservation Landmark requires one of two types of review to ensure the landmark's historic value is considered. The review period also ensures that there is an opportunity for the community to fully consider alternatives to demolition.

A. Demolition review.

1. When demolition review is required. Unless exempted by Subsection C, below, demolition of a Conservation Landmark is subject to demolition review if there is a covenant with the City that requires the owner to obtain City approval before demolishing or relocating the Conservation Landmark.

2. Issuance of a demolition permit after demolition review. If the review body for demolition review approves demolition of the Conservation Landmark, a permit for demolition will not be issued until the following are met:

   a. The decision in the demolition review is final;

   b. At least 120 days have passed since the date the Director of the Bureau of Development Services determined that the application was complete; and

   c. A permit for a new building on the site has been issued. The demolition and building permits may be issued simultaneously.

B. Demolition delay review. Unless addressed by Subsection A, above, or exempted by Subsection C, below, all Conservation Landmarks are subject to demolition delay review.

C. Exempt from demolition review and demolition delay review. The following are exempt from demolition review and demolition delay review.

1. Demolition of Conservation Landmarks required to be demolished because:

   a. The Bureau of Development Services requires the demolition due to an immediate danger to the health, safety, or welfare of the occupants, the owner, or that of the general public, as stated in Section 29.40.030 of Title 29, Property Maintenance Regulations; or

   b. The Code Hearings Officer requires the demolition, as provided for in Section 29.60.080 of Title 29, Property Maintenance Regulations.

2. Demolition of detached accessory structures no larger than 200 square feet, unless the accessory structure is identified in the Historic Resource Inventory, Historic Landmark nomination, or National Register nomination as an attribute that contributes to the historic value of a Historic Landmark.

Historic Districts

33.445.300 Designation of a Historic District

Local designation of Historic Districts may be established by the Historic Landmark Commission through a legislative or quasi-judicial procedure.

A. Designation by Historic Landmark Commission. Historic District designation may be established by the Historic Landmark Commission through a legislative procedure, using the approval criteria of Section 33.846.030.C.

B. Quasi-judicial designation. Historic District designation may be established through a quasi-judicial procedure; historic designation review is required.

33.445.310 Removal of a Historic District Designation

Removal of a resource's designation as a local Historic District requires a historic designation removal review.

33.445.315 Preservation Agreements in Historic Districts

Historic resources in Historic Districts are eligible for the preservation agreement detailed in Section 33.445.600.

33.445.320 Development and Alterations in a Historic District

Building a new structure or altering an existing structure in a Historic District requires historic resource review to ensure the resource's historic value is considered prior to or during the development process.

A. When historic resource review is required in a Historic District. Unless exempted by Subsection B, below, the following proposals in a Historic District are subject to historic resource review:

1. Exterior alterations;
2. Building a new structure;
3. Installation or alteration of exterior signs;
4. Nonstandard improvements in the public right-of-way, such as street lights, street furniture, planters, public art, sidewalk and street paving materials, and landscaping. Nonstandard improvements in the public right-of-way must receive approval from the City Engineer prior to applying for historic resource review;
5. Proposals using one of the provisions of the a, Alternative Design Density Overlay Zone, specified in Sections 33.405.040 through .080; and

6. Proposals in the Albina Community plan district using the provisions of Section 33.505.220, Parking Requirement Reduction, or Section 33.505.230, Attached Residential Infill on Vacant Lots in R5-Zoned Areas.

B. Exempt from historic resource review.

1. Construction of a detached accessory structure with 200 square feet or less of floor area when the accessory structure is at least 40 feet from a front property line and, if on a corner lot, at least 25 feet from a side street lot line;

2. Alterations that do not require a building, site, zoning, or sign permit from the City, and that will not alter the exterior features of a resource having such features specifically listed in the Historic Resource Inventory, Landmark nomination, or National Register nomination as an attribute that contributes to the resource's historic value;

3. Alterations to noncontributing resources where the alterations:

   a. Affect only non-street-facing facades; and

   b. The total area altered on all facades is up to 150 square feet. Calculation of the area of the façades affected includes the sum of the area of each alteration.

4. Alterations to existing basement windows, where the alterations:

   a. Affect only non-street-facing facades; and

   b. Are limited to any combination of the following:

      (1) Replacement of windows in the same size opening, provided the window glass is recessed at least 2 inches from the outside edge of the exterior wall;

      (2) Replacement of windows in a larger or smaller opening, provided that at least half of the area of the new window opening is below grade and the window glass is recessed at least 2 inches from the outside edge of the exterior wall. See Figure 445-1.

5. Parking lot landscaping that meets the standards of this Title and does not include a wall or fence;

6. Repair;

7. Maintenance;

8. Improvements in the public right-of-way, such as street lights, street furniture, planters, public art, sidewalk and street paving materials, and landscaping, that meet the City Engineer’s standards;

Figure 445-1
Basement Windows Replacement

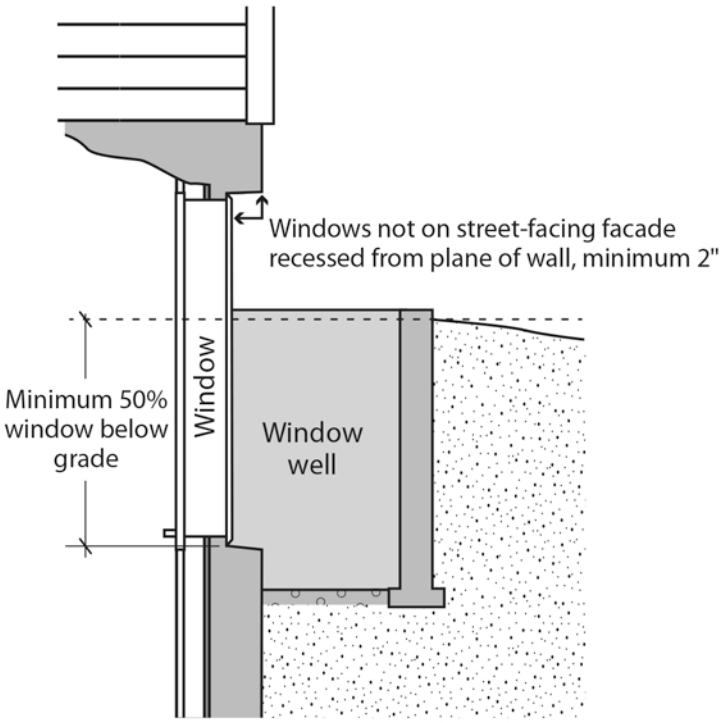

9. Rooftop mechanical equipment, other than radio frequency transmission facilities, added to an existing building if the following are met. For vents, the applicant may choose to meet either the standards of this paragraph or those of paragraph B.10, Vents.

    a. The area where the equipment will be installed must have a pitch of 1/12 or less;

    b. No more than 8 mechanical units are allowed, including both proposed and existing units;

    c. The proposed mechanical equipment must be set back at least 4 feet from the edge of the roof for every 1 foot of height of the equipment above the roof surface or top of parapet; and

    d. The proposed equipment must have a matte finish or be painted to match the roof.

10. Vents. On all residential structures in the RF through R1 zones and residential structures with up to three dwelling units on other zones, vents that meet all of the following:

    a. Wall vents. Vents installed on walls must meet the following. The regulations and measurements include elements associated with the vent, such as pipes and covers. The vent must:

(1) Be on a non-street facing facade;

(2) Project no more than 12 inches from the wall;

(3) Be no more than 1 square foot in area, where the area is width times height. The cumulative area of all proposed vents may be up to 2 square feet;

(4) Be at least 1 foot away from architectural features such as windows, doors, window and door trim, cornices and other ornamental features, except when located at or below finish first floor framing; and

(5) Be painted to match the adjacent surface.

b. Rooftop vents. Vents installed on roofs must meet the following. The regulations and measurements include elements associated with the vent, such as pipes and covers. The vent must:

(1) Be on a flat roof;

(2) Not be more than 30 inches high and no larger than 18 inches in width, depth, or diameter;

(3) Set back from the perimeters of the building at least 4 feet for every 1 foot of height; and

(4) Painted to match the adjacent surface.

11. Solar energy systems that meet the following requirements. When solar energy systems are proposed as part of a project that includes elements subject to historic resource review, the solar energy systems is not exempt:

a. On a flat roof, the horizontal portion of a mansard roof, or roofs surrounded by a parapet that is at least 12 inches higher than the highest part of the roof surface. The solar energy system must be mounted flush or on racks, with the system or rack extending no more than 5 feet above the top of the highest point of the roof. Solar energy systems must also be screened from the street by:

(1) An existing parapet along the street-facing facade that is as tall as the tallest part of the solar energy system, or

(2) Setting the solar energy system back from the roof edges facing the street 4 feet for each foot of solar energy system height.

b. On a pitched roof. Solar energy systems may be on a pitched roof facing a rear lot line or on a pitched roof surface facing within 45 degrees of the rear lot line. See Figure 445-2. The system must be mounted flush, with the plane of the system parallel with the roof surface, with the system no more than 12 inches from the surface of the roof at any point, and set back 3 feet from the roof edge and ridgeline. See Figure 445-3.

12. Skylights or roof hatches that meet the following requirements:

    a. The skylight or hatch is installed on a flat roof, the horizontal portion of a mansard roof, or a roof surrounded by an existing parapet that is at least 12 inches higher than the highest part of the roof surface; or

    b. The skylight or hatch is installed on the portion of a pitched roof that faces a rear lot line or faces within 45 degrees of the rear lot line, see Figure 445-2.

Figure 445-2
Solar Energy System, Skylight and Roof Hatch Location on Rooftop

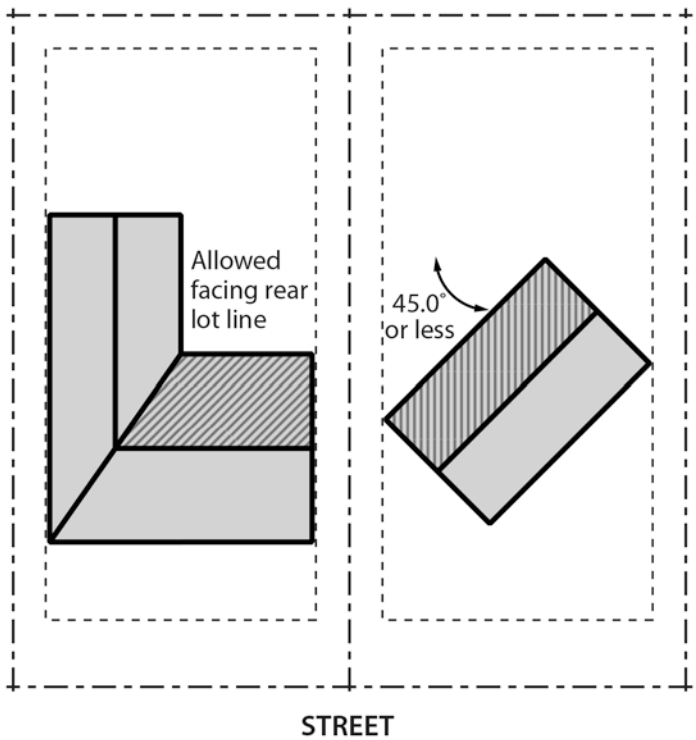

Figure 445-3
Solar Energy Systems on a Pitched Roof

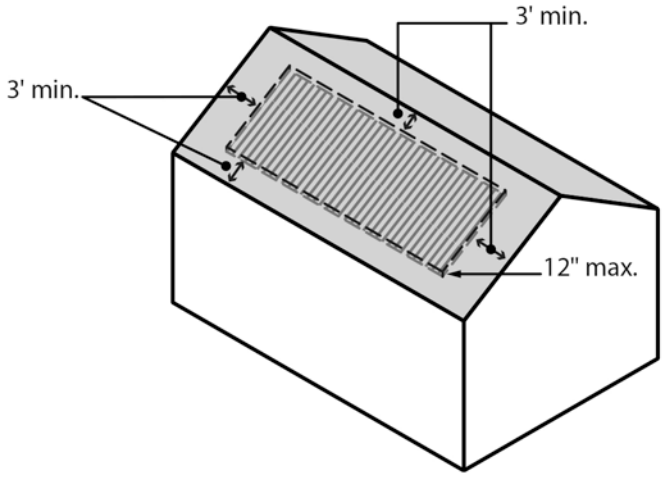

13. Radon mitigation systems on non-street facing facades;
14. Eco-roofs installed on existing buildings when the roof is flat or surrounded by an existing parapet that is at least 12 inches higher than the highest part of the eco-roof surface. When eco-roofs are proposed as part of a project that includes elements subject to historic resource review, the eco-roofs are not exempt. Plants must be species that do not characteristically exceed 12 inches in height at mature growth;
15. Public Art as defined in Chapter 5.74;
16. Permitted Original Art Murals as defined in Title 4 if the mural is proposed on a building that is not identified as contributing to the historic significance of a Historic District;
17. Exterior alterations to accommodate persons with disabilities in accordance with Chapter 11 of the Oregon Structural Specialty Code, when such alterations can be installed and removed without destroying existing materials;
18. Alterations to light wells when fully surrounded by the existing walls of the building;
19. Installation or removal of storm windows and doors;
20. Installation or removal of screen windows and doors;
21. Fences, retaining walls, and decks that meet the standards of this Title; and
22. Removal of fire escapes when required by the Fire Marshal.

33.445.330 Demolition of Historic Resources in a Historic District

Historic Landmarks in a Historic District are subject to the regulations of Section 33.445.150. Conservation Landmarks in a Historic District are subject to the regulations of Section 33.445.240. Demolition of other historic resources within a Historic District requires demolition review to ensure their historic value is considered. The review period also ensures that there is an opportunity for the community to fully consider alternatives to demolition.

A. Demolition review.

1. When demolition review is required. Unless exempted by Subsection B, below, demolition of a historic resource in a Historic District is subject to demolition review if:

   a. It is a structure that is identified as contributing to the historic significance of a Historic District; or

   b. There is a covenant with the City that requires the owner to obtain City approval before demolishing or relocating the historic resource.

2. Issuance of a demolition permit after demolition review. If the review body for demolition review approves demolition of the resource, a permit for demolition will not be issued until the following are met:

   a. The decision in the demolition review is final;

   b. At least 120 days have passed since the date the Director of the Bureau of Development Services determined that the application was complete; and

   c. A permit for a new building on the site has been issued. The demolition and building permits may be issued simultaneously.

B. Exempt from demolition review. Historic resources in Historic Districts required to be demolished because of the following are exempt from demolition review:

1. The Bureau of Development Services requires demolition due to an immediate danger to the health, safety, or welfare of the occupants, the owner, or that of the general public, as stated in Section 29.40.030 of Title 29, Property Maintenance Regulations; or

2. The Code Hearings Officer requires demolition, as provided for in Section 29.60.080 of Title 29, Property Maintenance Regulations.

Conservation Districts

33.445.400 Designation of a Conservation District

Conservation Districts may be designated by the Historic Landmark Commission through a legislative procedure or may be designated through a quasi-judicial procedure.

A. Designation by Historic Landmark Commission. Conservation District designation may be established by the Historic Landmark Commission through a legislative procedure, using the approval criteria of Section 33.846.030.C.

B. Quasi-judicial designation. Conservation District designation may be established through a quasi-judicial procedure; historic designation review is required.

33.445.410 Removal of a Conservation District Designation

Removal of a resource's designation as a Conservation District requires a historic designation removal review.

33.445.415 Preservation Agreements in Conservation Districts
Historic resources in Conservation Districts are eligible for the preservation agreement detailed in Section 33.445.600.

33.445.420 Development and Alterations in a Conservation District
Building a new structure or altering an existing structure in a Conservation District requires historic resource review to ensure the resource's historic value is considered prior to or during the development process.

A. When historic resource review is required in a Conservation District. Unless exempted by Subsection B., below, the following proposals in a Conservation District are subject to historic resource review. Some may be eligible to use the Community Design Standards as an alternative; see Section 33.445.710:

1. Exterior alterations;
2. Building a new structure;
3. Installation or alteration of exterior signs;
4. Nonstandard improvements in the public right-of-way, such as street lights, street furniture, planters, public art, sidewalk and street paving materials, and landscaping. Nonstandard improvements in the public right-of-way must receive approval from the City Engineer prior to applying for historic resource review;
5. Proposals using one of the provisions of the a, Alternative Design Density Overlay Zone, specified in Sections 33.405.040 through .080; and
6. Proposals in the Albina Community plan district using the provisions of Section 33.505.220, Parking Requirement Reduction, or Section 33.505.230, Attached Residential Infill on Vacant Lots in R5-Zoned Areas.

B. Exempt from historic resource review.

1. Construction of a detached accessory structure with 200 square feet or less of floor area when the accessory structure is at least 40 feet from a front property line and, if on a corner lot, 25 feet from a side street property line;
2. Alterations that do not require a building, site, zoning, or sign permit from the City, and that will not alter the exterior features of a resource having such features specifically listed in the Historic Resource Inventory, Landmark nomination, or National Register nomination as attributes that contribute to the resource's historic value;
3. Alterations to noncontributing resources where the alterations:
   a. Affect only non-street-facing facades; and
   b. The total area altered on all facades is up to 150 square feet. Calculation of the area of the facades affected includes the sum of the area of each alteration.
4. Alterations to existing basement windows, where the alterations:

a. Affect only non-street-facing facades; and

b. Are limited to any combination of the following exclusive of any other exempt alterations:

(1) Replacement of windows in the same size opening, provided the window glass is recessed at least 2 inches from the outside edge of the exterior wall;

(2) Replacement of windows in a larger or smaller opening, provided that at least half of the area of the new window opening is below grade and the window glass is recessed at least 2 inches from the outside edge of the exterior wall. See Figure 445-1.

5. Parking lot landscaping that meets the standards of this Title and does not include a wall or fence;

6. Repair;

7. Maintenance;

8. Improvements in the public right-of-way, such as street lights, street furniture, planters, public art, sidewalk and street paving materials, and landscaping, that meet the City Engineer's standards;

9. Rooftop mechanical equipment, other than radio frequency transmission facilities added to an existing building if the following are met. For vents, the applicant may choose to meet either the standards of this paragraph or those of paragraph B.11. Vents.

a. The area where the equipment will be installed must have a pitch of 1/12 or less;

b. No more than 8 mechanical units are allowed, including both proposed and existing units;

c. The proposed mechanical equipment must be set back at least 4 feet from the edge of the roof for every 1 foot of height of the equipment above the roof surface or top of parapet; and

d. The proposed equipment must have a matte finish or be painted to match the roof.

10. Vents. On all residential structures in the RF through R1 zones and residential structures with up to three dwelling units in other zones, vents that meet all of the following:

a. Wall vents. Vents installed on walls must meet the following. The regulations and measurements include elements associated with the vent, such as pipes and covers. The vent must:

(1) Be on a non-street facing façade;

(2) Project no more than 12 inches from the wall;

(3) Be no more than 1 square foot in area, where the area is width times height. The cumulative area of all proposed vents may be up to 2 square feet;

(4) Be at least 1 foot away from architectural features such as windows, doors, window and door trim, cornices and other ornamental features, except when located at or below finish first floor framing; and

(5) Be painted to match the adjacent surface.

b. Rooftop vents. Vents installed on roofs must meet the following. The regulations and measurements include elements associated with the vent, such as pipes and covers. The vent must:

(1) Be on a flat roof;

(2) Not be more than 30 inches high and no larger than 18 inches in width, depth, or diameter;

(3) Set back from the perimeters of the building at least 4 feet for every 1 foot of height; and

(4) Painted to match the adjacent surface.

11. Solar energy systems added to an existing building that is neither a Conservation Landmark or Historic Landmark that meet the following requirements:

a. Rooftop solar energy systems must not increase the footprint of the structure, must not increase the peak height of the roof, and the system must be parallel to the slope of the roof;

b. Photovoltaic roofing shingles or tiles may be directly applied to the roof surface;

c. Photovoltaic glazing may be integrated into windows or skylights.

12. Skylights or roof hatches that meet the following requirements:

a. The skylight or hatch is installed on a flat roof, the horizontal portion of a mansard roof, or a roof surrounded by an existing parapet that is at least 12 inches higher than the highest part of the roof surface; or

b. The skylight or hatch is installed on the portion of a pitched roof that faces a rear lot line or faces within 45 degrees of the rear lot line, see Figure 445-2.

13. Radon mitigation systems on non-street facing facades;

14. Eco-roofs installed on existing buildings when the roof is flat or surrounded by a parapet that his at least 12 inches higher than the highest part of the eco-roof surface, and when no other nonexempt exterior improvements subject to historic resource review are proposed. Plants must be species that do not characteristically exceed 12-inches in height at mature growth;

15. Public Art as defined in Chapter 5.74;

16. Permitted Original Art Murals as defined in Title 4 if the mural is proposed on a building that is not identified as contributing to the historic significance of a Conservation District;

17. Exterior alterations to accommodate persons with disabilities in accordance with Chapter 11 of the Oregon Structural Specialty Code, when such alterations can be installed and removed without destroying existing materials;

18. Alterations to light wells when fully surrounded by the existing walls of the building;

19. Installation or removal of storm windows and doors;

20. Installation or removal of screen windows and doors;

21. Fences, retaining walls, and decks that meet the standards of this Title; and

22. Removal of fire escapes when required by the Fire Marshal.

33.445.430 Demolition of Historic Resources in a Conservation District
Historic Landmarks in a Conservation District are subject to the regulations of Section 33.445.150. Conservation Landmarks in a Conservation District are subject to the regulations of Section 33.445.240. Demolition of other historic resources in a Conservation District requires one of two types of review to ensure the resource's historic value is considered prior to or during the development process. The review period also ensures that there is an opportunity for the community to fully consider alternatives to demolition.

A. Demolition review.

1. When demolition review is required. Unless exempted by Subsection C, below, demolition of a historic resource in a Conservation District is subject to demolition review if there is a covenant with the City that requires the owner to obtain City approval before demolishing or relocating the resource.

2. Issuance of a demolition permit after demolition review. If the review body for demolition review approves demolition of the resource, a permit for demolition will not be issued until the following are met:

   a. The decision in the demolition review is final;

   b. At least 120 days have passed since the date the Director of the Bureau of Development Services determined that the application was complete; and

   c. A permit for a new building on the site has been issued. The demolition and building permits may be issued simultaneously.

B. Demolition delay review. Unless addressed by Subsection A, above, or exempted by Subsection C, below, all primary structures in Conservation Districts are subject to demolition delay review.

C. Exempt from demolition review and demolition delay review. The following are exempt from demolition review and demolition delay review:

1. Historic resources in Conservation Districts required to be demolished because:

    a. The Bureau of Development Services requires demolition due to an immediate danger to the health, safety, or welfare of the occupants, the owner, or that of the general public, as stated in Section 29.40.030 of Title 29, Property Maintenance Regulations; or

    b. The Code Hearings Officer requires demolition, as provided for in Section 29.60.080 of Title 29, Property Maintenance Regulations.

2. Demolition of a structure that is identified as noncontributing to the historic significance of a Conservation District.

Historic Resource Inventory Listing

33.445.500 Listing in the Historic Resource Inventory

A historic resource may be listed in the City's Historic Resource Inventory by the Historic Landmarks Commission as the result of an area planning study reviewed through a legislative procedure. Consent of the owner of the resource is required.

33.445.510 Removal of Historic Resource Inventory Listing

A. Automatic removal of listing in the Historic Resource Inventory. When a resource listed in the City's Historic Resource Inventory is demolished or destroyed by causes beyond the control of the owner, its listing in the Inventory is automatically removed.

B. Requests for removal. A resource listed in the City's Historic Resource Inventory will be removed from the Inventory if the owner sends a written request to the Bureau of Development Services. The resource will be removed from the Inventory on the date that the Bureau of Development Services receives the request.

C. Removal after demolition. When a resource listed in the City's Historic Resource Inventory is demolished, after either approval of demolition through demolition review or after demolition delay, its listing in the Inventory is automatically removed.

33.445.515 Preservation Agreements for Resources Listed in the Historic Resource Inventory

Resources listed in the Historic Resource Inventory are eligible for the preservation agreement detailed in Section 33.445.600.

33.445.520 Demolition of Resources Listed in the Historic Resource Inventory

A. Demolition review.

1. When demolition review is required. Unless exempted by Subsection C, below, demolition of a resource listed in the Historic Resource Inventory is subject to demolition review if there is a covenant with the City that requires the owner to obtain City approval before demolishing or relocating the resource.

2. Issuance of a demolition permit after demolition review. If the review body for demolition review approves demolition of the resource, a permit for demolition will not be issued until the following are met:

a. The decision in the demolition review is final;

b. At least 120 days have passed since the date the Director of the Bureau of Development Services determined that the application was complete; and

c. A permit for a new building on the site has been issued. The demolition and building permits may be issued simultaneously.

B. Demolition delay review. Unless addressed by Subsection A, above, or exempted by Subsection C, below, Rank I, II, or III resources listed in the City's Historic Resource Inventory are subject to demolition delay review.

C. Exempt from demolition review and demolition delay review. Rank I, II, or III resources listed in the City's Historic Resource Inventory that are required to be demolished because of the following are exempt from demolition review and demolition delay review:

1. The Bureau of Development Services requires demolition due to an immediate danger to the health, safety, or welfare of the occupants, the owner, or that of the general public, as stated in Section 29.40.030 of Title 29, Property Maintenance Regulations; or

2. The Code Hearings Officer requires demolition, as provided for in Section 29.60.080 of Title 29, Property Maintenance Regulations.

Historic Preservation Agreements and Historic Preservation Incentives

33.445.600 Preservation Agreements

A. Purpose. Preservation agreements increase the potential for historic resources to be used, protected, renovated, and preserved. They provide a mechanism for owners to commit to good stewardship of their historic resources.

B. Eligibility for preservation agreements. All historic resources are eligible to use the preservation agreement described in this Section.

C. Covenant. Owners who wish to enter into a preservation agreement must execute a covenant with the City. The covenant may not be revoked or rescinded.
The covenant must:

1. State that the owner agrees that the historic resource is subject to demolition review, and the owner will not demolish the historic resource unless the City approves the demolition or relocation through demolition review;

2. State that the owner agrees that the historic resource may be relocated only if the City approves the relocation through the following reviews:

   a. Sending site. The sending site is subject to Section 33.846.080, Demolition Review; and

   b. Receiving site. The receiving site is subject to both Section 33.846.060, Historic Resource Review and Section 33.846.030, Historic Designation Review; and

3. Meet the requirements of Section 33.700.060, Covenants with the City.

33.445.610 Historic Preservation Incentives

A. Purpose. Historic preservation incentives increase the potential for historic resources to be used, protected, renovated, and preserved. Incentives make preservation more attractive to owners of historic resources because they provide flexibility and economic opportunities.

B. Eligibility for historic preservation incentives. Conservation Landmarks and Historic Landmarks are eligible to use the historic preservation incentives in Subsection C if the requirements of Subsection D are met. Sites with resources identified as contributing to the historic significance of a Historic District or a Conservation District are eligible to use the incentives in Paragraphs C.3 through C.8 if the requirements of Subsection D are met.

C. Incentives. The following incentives are allowed if the requirements of Subsection D, Covenant, are met. The incentives are:

1. Transfer of density and floor area ratio (FAR). Transfer of density from a landmark to another location is allowed in Multi-Dwelling, Commercial, and Employment zones. In Multi-Dwelling zones, the transfer is regulated by Subsection 33.120.205.E, Transfer of Density. In Commercial and Employment zones, the transfer of FAR is regulated by Subsections 33.130.205.C and 33.140.205.C.

2. Additional density in Single-Dwelling zones. Landmarks in Single-Dwelling zones may be used as multi-dwelling structures, up to a maximum of one dwelling unit for each 1,000 square feet of site area. No additional off-street parking is required, but the existing number of off-street parking spaces must be retained. The landmark may be expanded and the new net building area used for additional dwelling units only if the expansion is approved through historic resource review.

3. Additional density in Multi-Dwelling zones. Structures located in multi-dwelling zones may be used as multi-dwelling structures, with no maximum density. No additional off-street parking is required, but the existing number of off-street parking spaces must be retained. The building may be expanded and the new net building area used for additional dwelling units only if the expansion is approved through historic resource review.

4. Daycare in residential zones. Daycare is an allowed use in residential zones.

5. Conditional uses in R, C, and E zones. In R, C, and E zones, applications for conditional uses are processed through a Type II procedure.

6. Exemption from minimum density. Minimum housing density regulations do not apply.

7. Nonresidential uses in the RX zone. In the RX zone, except on sites which front on the Park Blocks frontages shown on Map 510-12, up to 100 percent of the net building area of a structure may be approved for Retail Sales And Service, Office, Major Event Entertainment, or Manufacturing And Production through Historic Preservation Incentive Review.

8. Nonresidential uses in the RH, R1 and R2 zones. In the RH, R1 and R2 zones, up to 100 percent of the net building area of a structure may be approved for Retail Sales And Service, Office, or Manufacturing And Production as follows:

   a. Review required. The nonresidential uses must be approved through Historic Preservation Incentive Review; and

   b. Previous nonresidential use required. The last use in the structure must have been in a nonresidential use category and have been allowed when established; if part of the structure was in residential use, the proposal must include at least as many dwelling units as were part of the last allowed use or uses. If the last allowed use was residential only, the structure is not eligible for this incentive.

D. Covenant. The owner must execute a covenant with the City. The covenant may not be revoked or rescinded. The covenant must:

1. State that the owner agrees that the historic resource is subject to demolition review, and the owner will not demolish or relocate the historic resource unless the City approves the demolition or relocation through demolition review; and

2. Meet the requirements of Section 33.700.060, Covenants with the City.

Community Design Standards

33.445.700 Purpose

The Community Design Standards provide an alternative process to historic resource review for some proposals. For some proposals, the applicant may choose to go through the historic resource review process set out in Chapter 33.846, Historic Resource Reviews, or to meet the objective standards of Chapter 33.218, Community Design Standards. The standards for signs are stated in Title 32, Signs and Related Regulations. Proposals that do not meet the Community Design Standards—or where the applicant prefers more flexibility—must go through historic resource review.

33.445.710 When Community Design Standards May Be Used.

Unless excluded by Section 33.445.720, When Community Design Standards May Not Be Used, proposals that meet all of the requirements of this section may use the Community Design Standards as an alternative to historic resource review.

A. Location. The proposal is:

1. A Conservation Landmark located outside of the Central City plan district;

2. In a Conservation District; or

3. In the Albina Community plan district shown on Map 505-1.

B. Maximum limits. The proposal is within the maximum limits of Table 445-1.

Table 445-1 Maximum Limits for Use of the Community Design Standards	
Zones	**Maximum Limit—New Dwelling Units or Floor Area**
Single Dwelling Zones	5 dwelling units
R2 & R3 Zones	10 dwelling units
R1, RH, RX, C, & E Zones	20,000 sq. ft. of floor area
I Zones	40,000 sq. ft. of floor area
IR Zone	See institution's Impact Mitigation Plan.
Zones	**Maximum Limit—Exterior Alterations**
All except IR	• For street facing facades less than 3,000 square feet, alterations affecting less than 1,500 square feet of the facade. • For street facing facades 3,000 square feet and larger, alterations affecting less than 50% of the facade area.
IR Zone	See institution's Impact Mitigation Plan.

33.445.720 When Community Design Standards May Not Be Used.

The Community Design Standards may not be used as an alternative to historic resource review as follows:

A. For institutional uses in residential zones, except when specifically allowed by an approved Impact Mitigation Plan or Conditional Use Master Plan;

B. For alterations to sites where there is a nonconforming use;

C. For mixed-use or non-residential development in the RF through R1 zones;

D. If the site is in a Historic District or the proposal is for alteration to a Historic Landmark;

E. If the proposal uses Section 33.405.050, Bonus Density for Design Review; and

F. For installation of solar panels on a conservation landmark.

Demolition Reviews

33.445.800 Types of Reviews.

There are two types of review that may be required before a historic resource is demolished. Other sections of this chapter describe when each review is required. The types of review are:

A. **Demolition Delay Review.** See Section 33.445.810;

B. **Demolition Review.** See Section 33.846.080.

33.445.805 Supplemental Application Requirements.

A. **Applicability.** In addition to the application requirements of Section 33.730.060, a demolition review application requesting approval based on criterion 33.846.080.C.1, or on both 33.846.080.C.1 and 33.846.080.C.2, requires two copies of a written statement that includes the information listed in Subsection B. An application requesting approval based solely on criterion 33.846.080.C.2 requires two copies of a written statement that includes the information listed in Paragraphs B.1 through B.4. Applicants may also submit any additional information relevant to the specific review and approval criteria.

B. Application requirements.

1. Statements from a licensed engineer and a licensed architect with experience in renovation, restoration, or rehabilitation as to the structural soundness of the structure and its suitability for continued use, renovation, restoration, or rehabilitation;
2. Statements from developers, real estate consultants, appraisers, or other real estate professionals experienced in rehabilitation as to the economic feasibility of restoration, renovation, or rehabilitation of existing structures or objects;
3. All studies commissioned by the owner as to profitable renovation, rehabilitation, or utilization of any structures or objects for alternative use, or a statement that none were obtained;
4. A summary of the historic preservation incentives and programs available and the extent to which they were explored by the applicant;
5. The amount paid for the property by the owner, the date of purchase, and the party from whom purchased, including a description of the relationship, if any, between the owner and the person from whom the property was purchased;
6. The current balance of any mortgages or any other financing secured by the property and the annual debt service, if any, for the previous two years;
7. All appraisals obtained within the previous two years by the owner or applicant in connection with purchase, offerings for sale, financing or ownership of the property, or a statement that none were obtained;
8. All listings of the property for sale or rent, price asked and offers received, if any, within the previous four years, or a statement that none were obtained;
9. Itemized income and expense statements for the property for the previous two years;
10. Estimate of the cost of the proposed demolition; and
11. Form of ownership or operation of the property, whether sole proprietorship, for-profit or not-for-profit corporation, limited partnership, joint venture, or other.

C. Exceptions. The Director of BDS may waive items listed if they are not applicable to the specific review and the applicant may choose not to submit any or all missing information requested by the Director of BDS, as specified in Section 33.730.060.

33.445.810 Demolition Delay Review.

A. Purpose. Demolition delay allows time for consideration of alternatives to demolition, such as restoration, relocation, or architectural salvage.

B. Procedure for Demolition Delay Review. Demolition delay review is a nondiscretionary administrative process with public notice but no hearing. Decisions are made by the Director of BDS and are final.

1. Application. The applicant must submit an application for a demolition permit.

2. Notice of application.

a. Posting notice on the site. Within 14 days of applying for a demolition permit, the applicant must post a notice on the site of the historic resource proposed for demolition. The posting must meet the following requirements:

(1) Number and location of posted notices. Notice must be placed on each frontage of the site occupied by the historic resource proposed for demolition. Notices must be posted within 10 feet of the street lot line and must be visible to pedestrians and motorists. Notices may not be posted in a public right-of-way;

(2) Content of the posted notice. The notice must include the following information:

- The statement, "Structure to be demolished;"
- The statement, "Demolition of this structure has been delayed to allow time for consideration of alternatives to demolition. Alternatives to demolition might include restoration, relocation, or architectural salvage;"
- The address of the structure proposed for demolition;
- The name, address, and telephone number of the owner or the party acting as an agent for the owner;
- The date of the posting; and
- A statement that a demolition permit may be issued 120 days after application was made for demolition, and the date that the permit will be issued.

(3) Removal of the posted notice. The posted notice must not be removed until the demolition permit is issued. The posted notice must be removed within 30 days of the issuance of the demolition permit.

b. Mailed notice.

(1) Notice to recognized associations. Within 14 days of receiving the application for a demolition permit, the Director of BDS will mail a notice of the proposed demolition to all recognized organizations within 1,000 feet of the site of the resource and to the State Historic Preservation Office. If the proposal is to demolish a resource in a Conservation District or Historic District and the district has a Historic Advisory Committee that has been recognized by the neighborhood association, notice will also be sent to the Historic Advisory Committee. The notice will include the same information as in Subparagraph B.1.b, above.

(2) Notice to other interested parties. The Director of BDS will maintain a subscription service for organizations and individuals who wish to be notified of applications for demolition of historic resources subject to demolition delay review. There is a fee for this notification service. Within 14 days of receiving the application for a demolition permit, the Director of BDS will mail a notice of the proposed demolition to all subscribers. The notice will include the same information as in Subparagraph B.1.b, above.

3. Decision. The Director of BDS will issue the demolition permit 120 days after receiving the application if the following requirements have been met:

   a. Photographic documentation. The applicant must submit photographs of the features of the resource that were identified when the resource was nominated, designated, placed within a Historic District or Conservation District, or placed on the Historic Resource Inventory. BDS will retain a copy of the documentation for the purpose of public information.

   b. Response to offers of relocation or salvage. The applicant must submit a letter stating that the applicant responded to all offers to relocate the resource, or to salvage elements of the resource during demolition. The letter must also identify those who submitted offers, and the applicant's response to those offers.

(Added by Ord. No. 169987, effective 7/1/96. Amended by Ord. No. 171220, effective 6/27/97; Ord. No. 171589, effective 11/1/97; Ord. No. 174263, effective 4/15/00; Ord. No. 175204, effective 3/1/01; Ord. No. 175837, effective 9/7/01; Ord. No. 176193, effective 2/1/02; Ord. No. 176587, effective 7/20/02; Ord. No. 178832, effective 10/21/04; Ord. No. 178946, effective 1/7/05; Ord. No. 181357, effective 11/9/07; Ord. No. 182429, effective 1/16/09; Ord. No. 182962, effective 7/31/09; Ord. No. 183598, effective 4/24/10; Ord. No. 184016, effective 08/20/10; Ord. No. 184016, effective 1/2/11; Ord. No. 184842, effective 9/2/11; Ord. No. 185915, effective 3/6/13.; Ord. No. 185915, effective 5/1/13; Ord. No. 186639, effective 7/11/14; Ord. No. 186053, effective 1/1/15; Ord. No. 187216, effective 7/24/15.)